Circuits Lab – Week 7

This lab has two parts. In Part 1 you will use a circuit simulator to explore how resistors and capacitors behave in circuits. In Part 2 you will build your first real circuits on a breadboard using the Raspberry Pi as a power supply. Record all measurements and observations as you go.

Part 1: Simulated Circuits

1. Resistors in series

a. Build a circuit with a 10V voltage source and two resistors in series
b. Define nodes on either side of the voltage source and in between the resistors
c. Examine the voltage values at each node and the current for the system
    - Node 1: 0V, Node 2: 5 V, Node 3: 10V
    - Node 1: 1A Node 2: 1A Node 3: 1A
d. Add a third resistor and an additional node and make note of how this changes the voltage at each node and the current in the system.
    - Node 1: 0V, Node 2: 3.33V, Node 3: 6.67 V, Node 4: 10V
    - Node 1: 666.7mA Node 2: 666.7mA Node 3: 666.7mA Node 4: 666.7mA
    - The current would stay constant across the board, whereas the voltage drops across each resistor. When you add an additional resistor, the current decreases and the voltage drop is slightly less per resistor.

2. Resistors in parallel

a. Build a circuit with a 10V voltage source and two resistors in parallel
b. Define nodes on either side of the voltage source and each resistor
c. Examine the voltage values at each node and the current across the voltage source and each resistor

Node 1: 10V Node 2: 10V

Node 1: 2.5A Node 2: 3.33A N

d. Add a third resistor in parallel and additional nodes. Make note of how this changes the voltage at each node and the current across each resistor.

Node 1: 10V Node 2: 10V Node 3:10V

Node 1: 2A Node 2: 3.33A Node 3: 2.5A

Resistor 1: 5 Ohms, Resistor 2: 3 Ohms Resistor 3: 4 Ohms

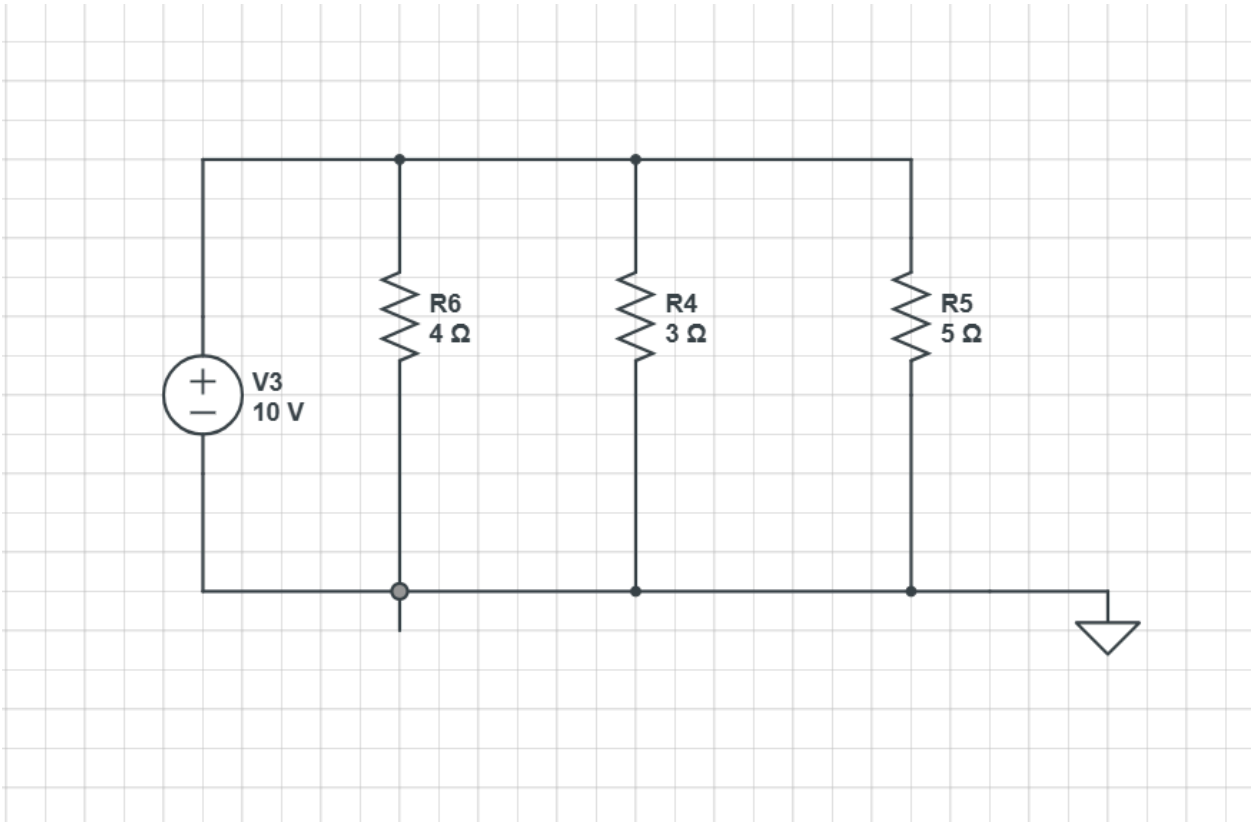

3. Resistors in series and parallel

a. Build a circuit with a 10V voltage source with two resistors in parallel and a third resistor in series – the third resistor is in series with each parallel resistor in a single loop.
b. Define nodes on either side of the voltage source and across each of the resistors
c. Examine the voltage value at each node and the current across the voltage source and each resistor. Make note of how this compares to either the case of resistors only in parallel or only in series.

Resistor 7: 5 Ohms Resistor 8: 4 Ohms Resistor 9: 3 Ohms

Resistor 7: –7.447V Resistor 8: 2.553V Resistor 9: 2.553V

Resistor 7: -1.489A Resistor 8: 638.3mA Resistor 9: 851.1mA

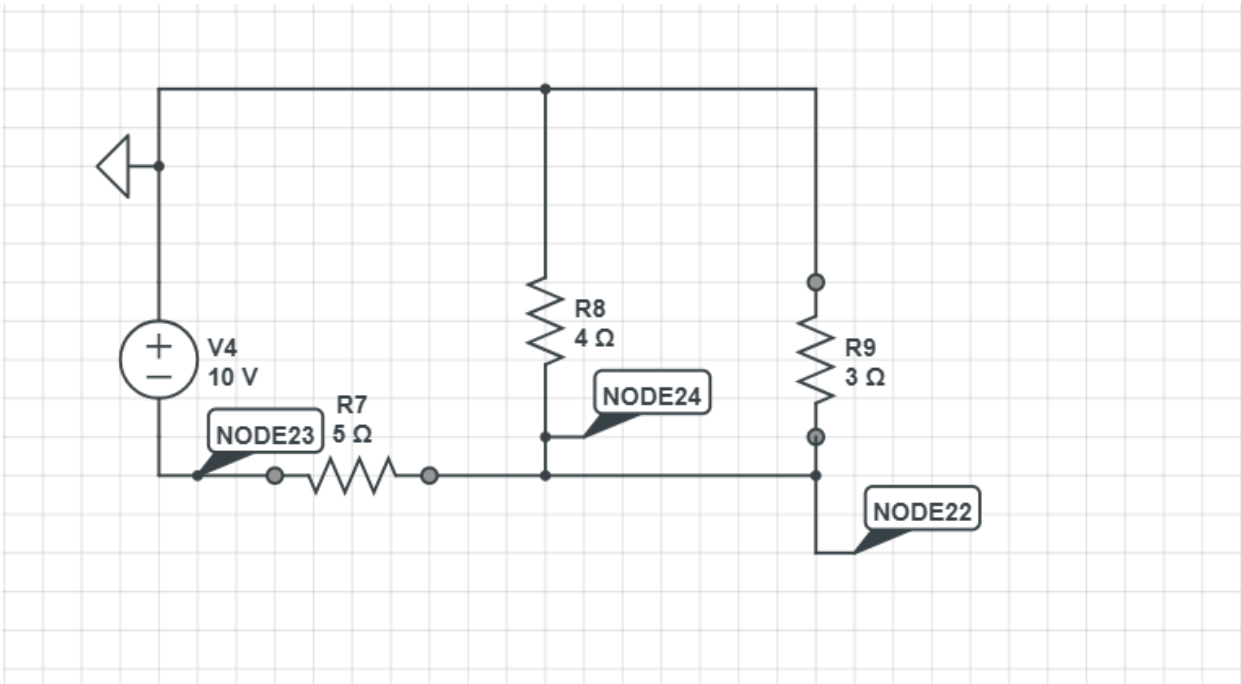

4. RC circuit

An RC circuit combines a resistor and a capacitor. The capacitor stores energy (like a tiny rechargeable battery), and the resistor controls how quickly it charges and discharges. The "time constant" of the circuit, written as the Greek letter tau (τ), is just the resistance multiplied by the capacitance: τ = R × C. This tells you roughly how long it takes for the capacitor to charge up or drain.

b. Build a simple RC circuit with a step function voltage supply, a 100 Ohm resistor and 10uF capacitor. Add voltage in and out nodes on either side of the resistor.
c. Use the time domain simulator to examine how the voltage and current change over time.
d. Explore how the time dependence of the system changes as you vary the resistance and capacitance in the system.

Time dependence increases as resistance or capacitance increase.

e. Calculate the time constant (τ = R × C) for each combination you try. Does the simulator match your calculation?

R = 100 **Ω**, C = 10 μF, τ = 0.001 s

R = 120 **Ω**, C = 10 μF, τ = 0.0012 s

Tried a few others, simulation matches calculations

5. RC filter (low-pass filter)

An RC circuit can also be used as a filter. When you feed a changing signal into an RC circuit, it lets slow changes through but smooths out fast changes. This is called a "low-pass filter" because it passes low frequencies and blocks high ones. The frequency where it starts to block is called the "cutoff frequency" and is determined by the same time constant from the previous activity. This is an important concept –

you will need this idea in a few weeks when we power a radiation detector and need to filter out noise from the power supply.

a. Build a circuit with an oscillating square wave voltage supply, initially with a 100 Hz frequency. Include a 1kΩ resistor and a 1uF capacitor. Add nodes to examine the input and output voltage.

b. `

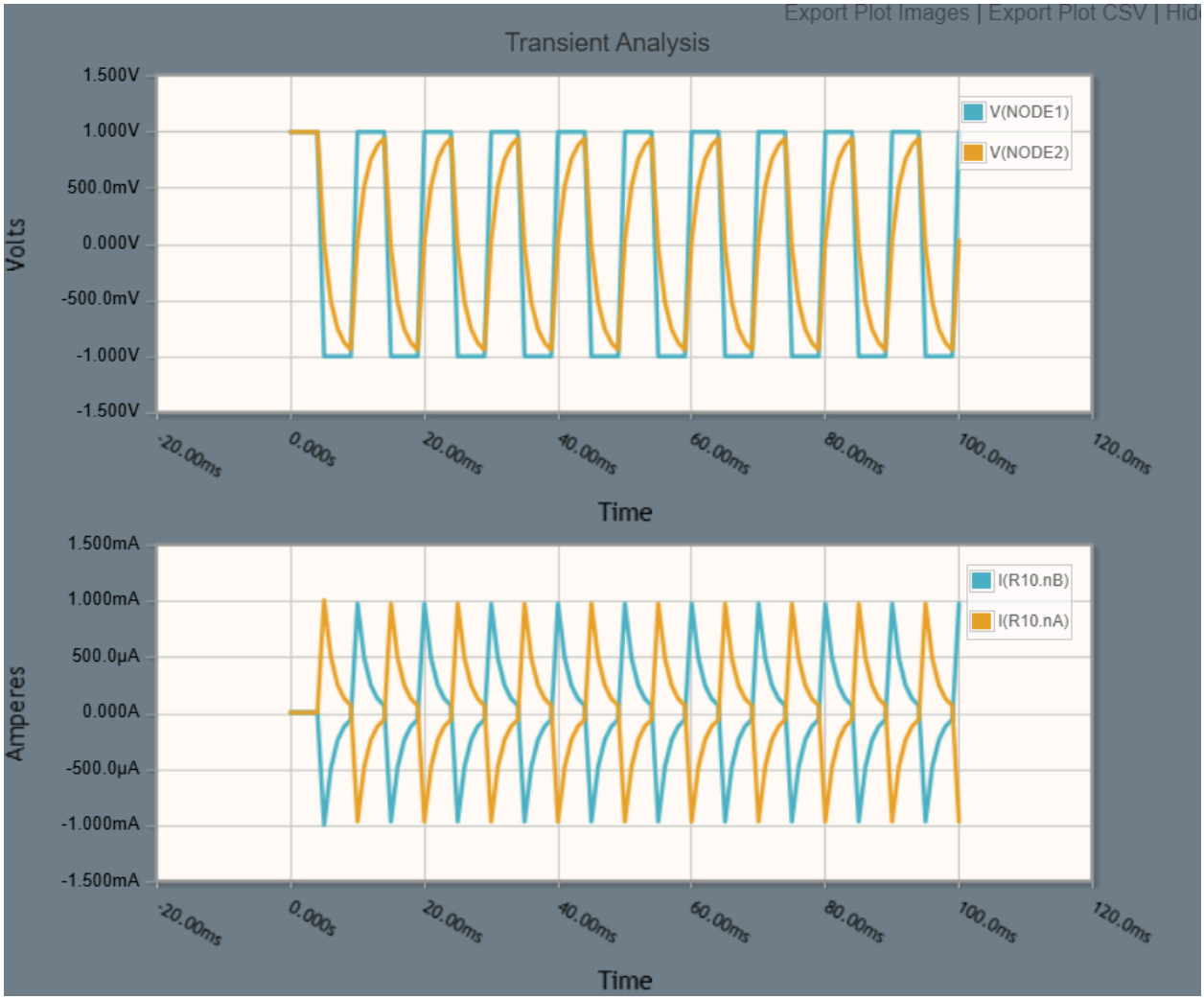

c. Use the time domain simulator to examine how changes to the resistance (and/or capacitance) affect the output voltage. Try different input voltage frequencies.

- Doubling the resistance leads to a much shallower curve, as the signal would not reach the top of the square wave before the input switches to low again.

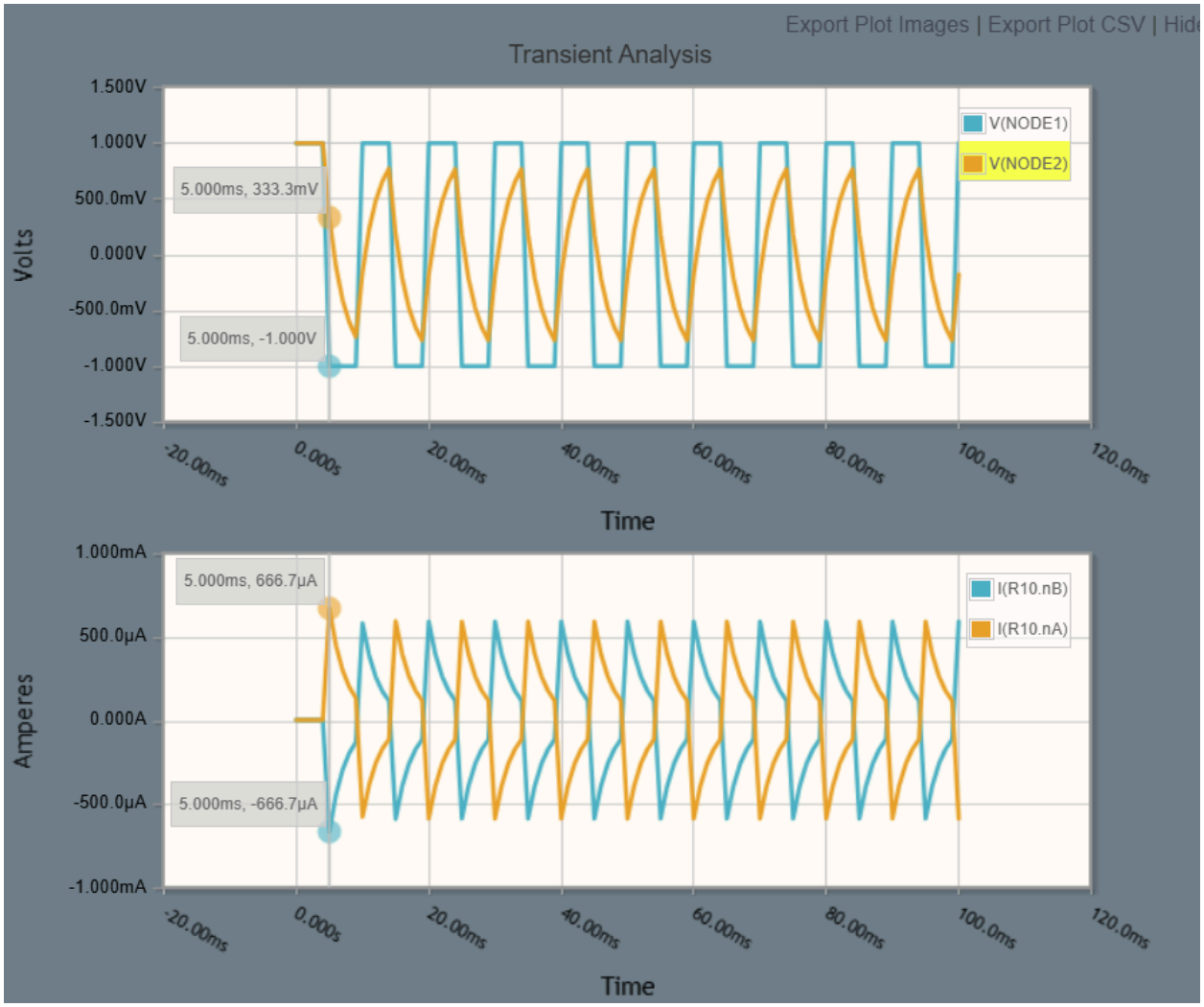

- The following pattern arouse when capacitance was doubled.

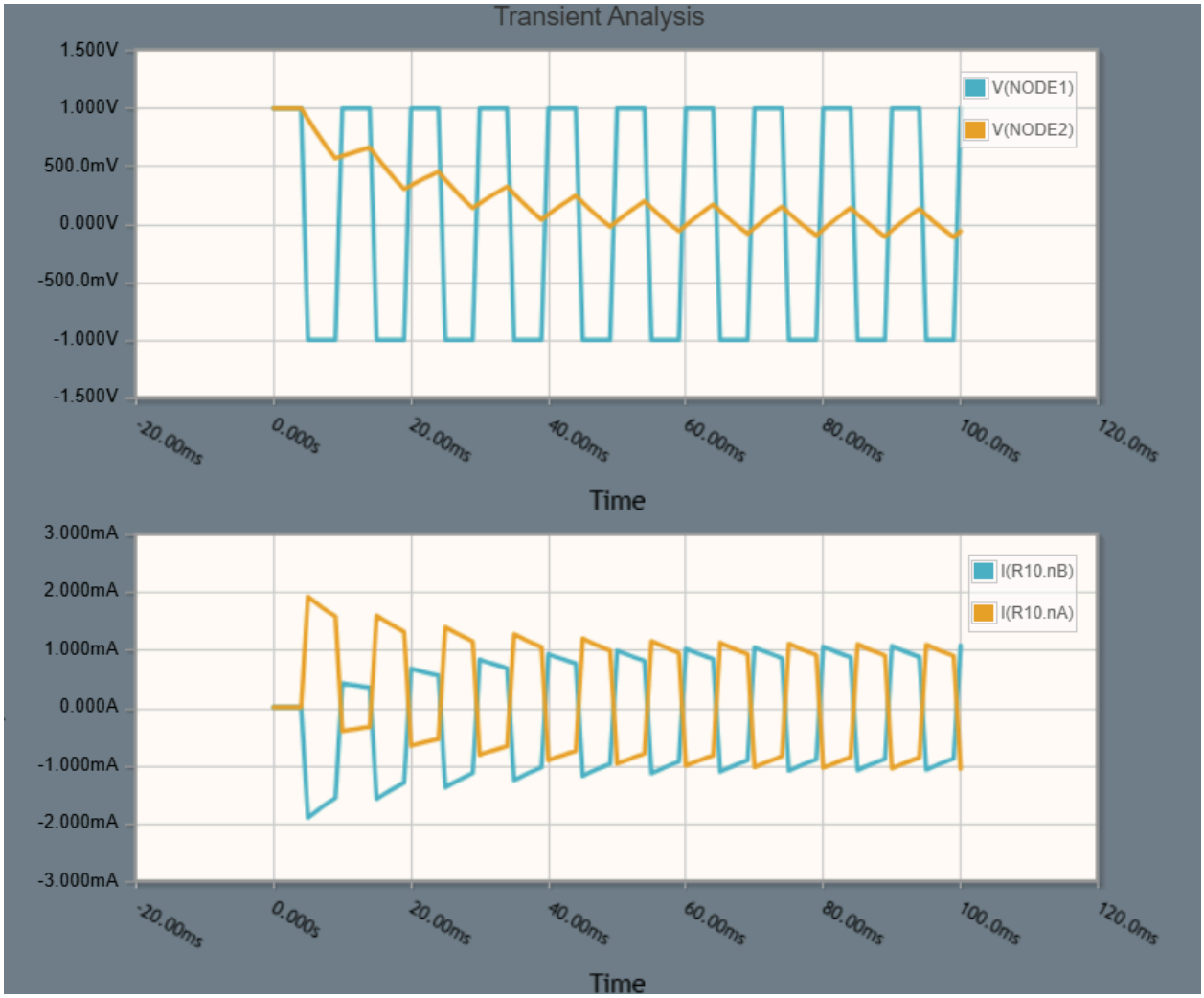

d. What happens to the output when you increase the frequency of the input signal? What happens when you decrease it?

As the frequency goes up, the output looks less like a square and more like a flat line with a slight voltage. When it is low the input and output voltages look almost identical

e. At what point does the output start to look very different from the input? How does this relate to the time constant of your circuit?

Output significantly deviates from the input at around 160 Hz. This relates to the time constant because it is inversely proportional to tau in the formula: f_c=1/(2piRC)

Part 2: Building Real Circuits

Now you will build real circuits on a breadboard using your Raspberry Pi (RPi) as a voltage source. This will get you familiar with the breadboard and basic tools you will use in the coming weeks.

6. Setting up your breadboard

a. Turn on the Raspberry Pi (RPi)
b. The breadboard has two long columns on each side marked + and –. These are the power rails. The rows in the middle of the board are where you will place components. Each row of five holes is connected internally, so anything plugged into the same row is electrically connected.
c. Connect one of the 5V pins on the RPi to the + column on the breadboard
d. Connect one of the ground pins on the RPi to the – column on the breadboard
e. Run a connector from the + column to one row on the main part of the breadboard
f. Run a connector from the – column to a different (but close) row on the main part of the breadboard
g. If we connected a 1Ω resistor (don't try it!) between these two rows – so that it is in a closed loop with the 5V supply from the RPi, how much current would this circuit attempt to draw across the resistor?

It would attempt to draw 5A

h. The RPi adaptor provides 5V and up to 2 Amps, is this current sufficient?

It would not be sufficient current, it would attempt to draw 5A

i. What do you think might happen? Please don't actually do this.

The RPi has no fuses or breakers so its circuits would draw too much current and get fried.

j. Connect a resistor of more than at least 500Ω between the two rows to make a complete circuit.
k. Why is a higher resistance safer? What might happen to the resistor if it draws too much current?

Higher resistance means lower current. A resistor might burn out if it draws too much current.

l. Use your multi-meter to measure the voltage drop across the resistor. Is it what you expected?

   NOTE: To measure voltage, connect the meter leads to the two sides of the component (in parallel with it). To measure current, you have to put the meter in series with the rest of the circuit – the current has to run through the meter. If your meter can measure current, try that as well.

   - Voltage: 4.94V
   - Current: 0.04 A

7. Building a real RC circuit

Now you are going to build a real version of the RC circuit you simulated in Part 1 and actually measure the time constant.

e. Remove the single resistor from your breadboard circuit and replace it with a 10kΩ resistor and a 100uF capacitor in series. The resistor should connect to the +5V side and the capacitor should connect between the resistor and ground. Make sure the capacitor is oriented correctly – electrolytic capacitors (the tall cylindrical ones) have a marked negative side that should connect toward ground.

NOTE: The order of resistor and capacitor in the loop does not change the time constant, but placing the resistor first and measuring voltage across the capacitor makes it easier to see the charging and discharging behavior.

f. Calculate the time constant for this circuit. With a 10kΩ resistor and a 100uF capacitor, what should τ be? This should be a familiar unit of time.

1 second

g. Set your multi-meter to measure DC voltage and connect it across the capacitor (one lead on each side of the capacitor).

4.91 V

h. Disconnect the wire going from the + rail to the resistor. The capacitor should be fully discharged – the voltage across it should read 0V (or close to it). If it does not, briefly touch a connecting wire across the resistor+capacitor circuit, with the + rail disconnected, to discharge it.

Slowly falling, essentially capacitor is discharging

i. Now reconnect the wire from the + rail to the resistor and watch the voltage on the multi-meter. You should see the voltage rise from 0V toward 5V. Does it rise quickly at first and then slow down?

Rising fast, and then settles out at about 4.9V.

j. Once the capacitor is charged, disconnect the +5V wire from the resistor and instead connect that end of the resistor directly to the ground (–) rail. Watch the voltage reading. You should see it decay from ~5V back toward 0V.

Discharged quickly to 0 within 10 seconds.

k. Try to estimate how long it takes for the voltage to drop to about 37% of where it started (roughly 1.8V if it started at 5V). This time is one time constant. How does it compare to your calculation?

1.8 Volts reached in 1 s, which perfectly coincides with the calculated time dependence.

NOTE: 37% might seem like an odd number. It comes from the math behind the exponential decay – after exactly one time constant, the voltage has dropped to 1/e (about 37%) of its starting value. This is the same exponential behavior you saw in the simulation.

l. Try swapping in different resistor and capacitor values. For each combination, calculate the expected time constant first, then measure it. Try to pick values that give you time constants you can comfortably observe – too short and it will be hard to read the meter, too long and you will be waiting a while.

Resistor 1: 5.6kΩ

Resistor 2: 22kΩ

Capacitor 2: 47µF

Resistance	Capacitance	Calculated Time Constant	Measured Time Constant
10 kΩ	100 us	1 s	1.15s
5.6 kΩ	100 µF	0.56 s	0.5 s

22 kΩ	100µF	2.2 s	3.4 s
22 kΩ	47 µF	1.034 s	0.96 s

m. How do your measurements compare to the values you calculated and to what you saw in the simulation? Are they exactly the same? If not, what might be causing any differences?

- High uncertainty in when to start and stop measuring the time, leading to a large amount of variation in time constants.
- Real-world capacitors are not as precise as they often have a tolerance of 20%. Meaning our 100 uF capacitors could be anywhere between 80 and 120 uF.
- To measure voltage, the multimeter must draw a tiny amount of current from the circuit. When we put the meter probes across the capacitor, we are creating a very weak parallel path for the electrons to escape, which can slightly alter the discharge time